AVerMedia D133S Carrier board and D133SOXB/ONB Box PC

Applies to NVIDIA® Jetson Orin™ NX/ Orin™ NANO Module
Support Super Mode

[Preliminary]

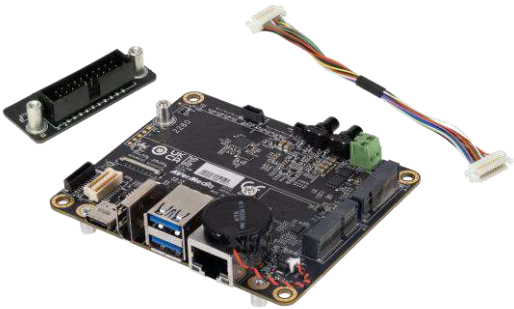

AVerMedia Technologies, Inc.
No. 135, Jian 1st Rd., Zhonghe Dist., New Taipei City 23585, Taiwan
Tel: 886-2-2226-3630
Fax: 886-2-3234-4842
Sales and Marketing: Contact
Technical Support: Professional User

Table of Contents

Preface 3
- Disclaimer 3
- Technical Support 3
- Contact Enquiry 3
- Download User Manual 3

1.0 Introduction 9
- 1.1 Product Specifications 10
- 1.2 Option Accessory 12

2.0 Product Overview 13
- 2.1 Block Diagram 13
- 2.2 Front View and Back View of Carrier board 14
- 2.3 Front View and Three -Quarter View of BoxPC 15
- 2.3 Connector Summary 17

3.0 Feature Description 19
- 3.1 Jetson module Connector 19
- 3.2 RTC Battery Connector 19
- 3.3 Power Supply Connector 20
- 3.4 Gigabit Ethernet Connector 20
- 3.5 USB 3.2 Gen2 Type-A Connector #1 and #2 20
- 3.6 HDMI OUTPUT 21
- 3.7 M.2 E key 2230 21
- 3.8 USB type C Connector 22
- 3.9 M.2 M key 2280 22
- 3.10 Optional Function Selection 22
- 3.11 Power Button 23
- 3.12 Recovery Button 23
- 3.13 20-Pin GPIO expansion 23
- 3.14 MIPI CSI-2 DPHY Lanes 24
- 3.15 Fan Power connector 26
- 3.16 Expansion 4/5G Daughter Board Connector 26
- 3.17 UART2 Optional Selection 27
- 3.18 Expansion Daughter Board Power Connector 28
- 3.19 Other Switches and Jumpers 28

4.0 OOB Hardwarer Function Settings 29
- 4.1 OOB connector 29
- 4.2 UART2 Optional Selection 29

4.3 Gigabit Ethernet connection setting (RMII).....30

5.0 Installation 31

6.0 Software 32

7.0 OOB Software Settings 39

8.0 Dimension Drawings 41

8.1 Dimension Drawings of D133S (5G) carrier board.....41

8.2 Dimension Drawing of D133SOXB/ONB (5G) Box PC 43

8.3 Dimension Drawing of D133SOXB/ONB (5G) +OOB Box PC 46

9.0 Accessory Drawings 48

9.1 Fan Module/ Adapter/ Power Cord 48

Preface

Disclaimer

The information contained in this user manual, including but not limited to any product specification is subject to change without notice. AVerMedia assumes no liability for any damages incurred directly or indirectly from any technical or typographical errors or omissions contained herein or for discrepancies between the product and the user manual.

Technical Support

If you experience the difficulty after reading this manual and/or using the product, please contact the reseller from which you purchased the product. In most cases, the reseller can help you with the product installation and the difficulty you encountered.

In case the reseller is not able to resolve your problem, our highly capable global technical support team can certainly assist you. Our technical support section is available 24 hours a day and 7 days a week through our website, with the click here. For more contact information, you may find it in the section of AVerMedia Global Offices.

Contact Enquiry

For more information of our products, pricing, and order placement, please fill in our inquiry form here, we will contact you within 24 hours.

Download User Manual

Please click the link here to download the file of this user manual from AVerMedia website.

Revision History

Revision	Date	Updates
Version 1.0	May, 14 , 2025	1st Released

AVerMedia Global Offices

https://www.avermedia.com/professional/contact-us

Headquarters

Taiwan Office
No. 135, Jian 1st Rd., Zhonghe Dist., New Taipei City 23585,Taiwan
Tel: +886-2-2226-3630
Fax: +886-2-3234-4842
Sales & Marketing: Contact
Technical Support: Home users / Professional users

The Americas

USA Office
754 Charcot Avenue, San Jose, CA 95131
Sales & Marketing: Contact
Technical Support: Home users / Professional users

Brazil Office
Sales & Marketing: Contact
Technical Support: Home users / Professional users

Latin America Office
Sales & Marketing: Contact
Technical Support: Home users / Professional users

Europe

Head Office EU
AVT Solutions GmbH
Hanauer Landstrasse 291 B 60314 Frankfurt Hessen
Germany
Technical Support: Home users / Professional users

Russia Office
Sales & Marketing: Contact
Technical Support: Home users / Professional users
Professional Solutions Support Tel:
+7 (925) 834-0310

Spain Office
AVerMedia Information (Spain) S.L.
Ronda de Poniente no. 16 Planta Baja, Puerta K
28760 Tres cantos, Madrid. Spain
Spain:
Sales & Marketing: Contact
Technical Support: Home users / Professional users

Asia-Pacific

China Office
Room 1510, No.488, Hitech Plaza, South Wuning Rd., Jingan District, Shanghai, China
Tel: +86-021-5298 7985
Fax: +86-021-5298 7981
Sales & Marketing: Contact
Technical Support: Home users / Professional users

India Office
Sales & Marketing: Contact
Technical Support: Home users / Professional users

Japan Office
10F TOWA akihabara Bldg.1-8 Akihabara, Taito-ku, Tokyo, 110-0006 Japan
Sales & Marketing: Contact
Technical Support: Home users / Professional users

Thailand Office
Sales & Marketing: Contact
Technical Support: Home users / Professional users

Korea Office
Sales & Marketing: Contact
Technical Support: Home users / Professional users

Vietnam Office
5F, No. 596 Nguyen Dinh Chieu St., Ward 3, District 3, HCM City, Vietnam
Tel: +84-28-22 539 211
Fax: +84-28-22 539 210
Sales & Marketing: Contact
Technical Support: Home users / Professional users

Limited Product Warranty

AVerMedia provides three-year product warranty. Should this product, in AVerMedia's opinion, fail to be in the good working order during the warranty period, AVerMedia will, at its option, repair or replace it at no charge, provided that the product has not been subjected to abuse, misuse, accident, disaster, or non-AVerMedia authorized modification or repair.

You may obtain the warranty service by delivering this product to an authorized AVerMedia business partner or to AVerMedia along with the proof of purchase. Product returned to AVerMedia must be pre-authorized by AVerMedia with an RMA (Return Material Authorization) number marked on the outside of the package and sent prepaid, insured, and packaged for the safe shipment. AVerMedia will return the product by prepaid shipment service.

It is not recommended to disassemble the box PC, which will impact the warranty. The limited product warranty is only valid over the serviceable life of the product. This is defined as the period during which all components are available. Should the product prove to be irreparable, AVerMedia reserves the right to substitute an equivalent product if available or to retract the product warranty if no replacement is available.

The above product warranty is the only warranty authorized by AVerMedia. Under no circumstances will AVerMedia be liable in any way for any damages, including any lost profits, lost savings, or other incidental or consequential damages arising out of the use of, or inability to use, such product.

Copyright Notice

The information contained in this document is subject to change without notice. AVerMedia shall not be liable for errors contained herein or for incidental consequential damages in connection with the furnishing, performance, or use of this material. This document contains proprietary information that is protected by copyright. All rights are reserved. No part of this document may be photocopied, reproduced, or translated to another language without the prior written consent by AVerMedia.

Trademark Acknowledgement

AVerMedia acknowledges all the trademarks, registered trademarks, and/or copyrights referred to in this document as the property of their respective owners. Not listing all possible trademarks or copyright acknowledgments does not constitute the lack of acknowledgment to the rightful owners of the trademarks and copyrights mentioned in this document.

ESD Warning

Electronic components and circuits are sensitive to Electrostatic Discharge (ESD). When handling any circuit board assemblies including AVerMedia AVerMedia products, it is highly recommended that ESD safety precautions can be observed. ESD safe best practices can include, but are not limited to the following ones.

1. Leave the circuit board in the antistatic package until it is ready to be installed.
2. Use a grounded wrist strap when handling the circuit board. At a minimum, you need to touch a grounded metal object to dissipate any static charge, which may be present on you.
3. Avoid handling the circuit board in the carpeted areas.
4. Handle the board by the edges and avoid the contact with the components.
5. Only handle the circuit boards in ESD safe areas, which may include ESD floor and/or table mats, wrist strap stations, and ESD safe lab coats.

Safety Precaution:

1. All cautions and warnings on the device should be noted.
2. For safety consideration, do NOT open the device if not a qualified service stuff.
3. Place the device on a solid surface during installation to prevent falls.
4. Keep the device away from humidity.
5. Do NOT leave this device in an un-controlled environment with temperatures beyond the device's permitted storage temperature to avoid damage.
6. All adaptors and cables supplied by AVerMedia are verified. Do NOT use any others not supplied by AVerMedia to avoid any malfunction or fires.
7. Make sure the power source matches the power rating of the device.
8. Place the power cord where people cannot step on it. Do not put anything on the power cord.
9. Always completely disconnect the power while the device is not usage or idle for a long time.

10. Disconnect the device from any AC supply before cleaning. While cleaning, use a damp cloth instead of liquid or spray detergents.
11. Make sure the device is installed near a power outlet and easy for accessible.
12. Do not cover the openings on the device to ensure optimal heat dissipation.
13. Watch out the heatsink or heat spreader of the device when the system is running.
14. Never pour any liquid into the openings. This could cause fire or electric shock.
15. The static electricity should be noted while installing any internal components. Consider to use a grounding wrist strap and put all electronic parts in static-shielded containers.

If the following situations occur, please contact our service personnel:

(1) The device is dropped or damaged

(2) Damaged power cord or plug

(3) Exposure to moisture

(4) Liquid intrusion into the device

(5) Any obvious signs of damage displayed on the device

(6) Device is not working as expected or in a manner as described in this manual

1.0 Introduction

AVerMedia D133S/D133SONB/D133SOXB is a fully featured carrier board/engineering kit/box PC designed for NVIDIA® Jetson Orin NX/Nano modules. AVerMedia provides access to a wide range of latest interfaces on NVIDIA® Jetson Orin NX/Nano modules.

D133S/D133SONB/D133SOXB provide HDMI video output , two USB 3.2 ports, one GbE RJ-45 port, 20-pin expansion header, and one USB 2.0 type C port for recovery.

Operating with NVIDIA® Jetson Orin NX/Nano modules and the rich I/O functions, AVerMedia D133S/D133SONB/D133SOXB is the perfect choice in building a compact, high performance AI edge computing platform for the intelligent video analytics applications.

1.1 Product Specifications

Model	D133S
Type	Carrier board (Support Super Mode)
NVIDIA GPU SoC Module Compatibility	NVIDIA® Jetson Orin NANO-8G/4G module NVIDIA® Jetson Orin NX -16G/8G module
Networking	1x GbE RJ-45 1xM.2. key E 2230 for Wi-Fi
Display Output	1x HDMI 4Kp30 for Orin Nano 1x HDMI 4Kp60 for Orin NX
Temperature	Operating temperature -40°C~85°C Storage temperature -40°C ~ 85°C Relative humidity 40 °C @ 95%, Non-Condensing
MIPI Camera Inputs	2x 4 lane MIPI CSI-2, 22 pin FPC 0.5mm Pitch Connector
USB	1 x USB 2.0 type C for recovery 2 x USB 3.0 Type-A
Storage*	1x M.2. key M 2280 for NVMe
Expansion Header	20 pins: 2x I2C, 1x UART, 9x GPIOs 15 pins: support OOB module 5 pins & 30 pins: support 4G/5G/capture card functions via daughter board
Power requirement	3.5mm Screw Terminal; 12V/5A , 12V~24V is recommended.
Power adapter/Power Cord	12V/5A adapter and US/JP/EU/UK/TW/AU/CN power cord (optional)
Fan Module	Fan solution (optional)
Buttons	Power and Recovery
RTC Battery	Support RTC battery and Battery Life Monitoring by MCU
PCB/Electronics Mechanical Info	90mm x 76mm (3.54” x 2.99”), Weight: 70g
Certifications	CE, FCC,VCCI, KC(TBA)

Model	D133SOXB/ONB
Type	Box PC (Support Super Mode)
NVIDIA GPU SoC Module Compatibility	NVIDIA® Jetson Orin NANO-8G/4G module NVIDIA® Jetson Orin NX -16G/8G module
Networking	1 x GbE RJ-45 1 x M.2. key E 2230 for wifi
Display Output	1x HDMI 4Kp30 for Orin Nano 1x HDMI 4Kp60 for Orin NX
Temperature	Operating temperature -25°C~60°C (TBD) Storage temperature -40°C ~ 85°C Relative humidity 40 °C @ 95%, Non-Condensing
MIPI Camera Inputs	2 x 4 lane MIPI CSI-2, 22 pin FPC 0.5mm Pitch
USB	1 x USB 2.0 type C for recovery 2 x USB 3.0 Type-A
Storage*	1x M.2. key M 2280 for NVMe (256G SSD installed)
Expansion Header	20 pins: 2x I2C, 1x UART, 9x GPIOs
Power requirement	3.5mm Screw Terminal; 12V/5A , 12V~24V is recommended
Power adapter/Power Cord	12V/5A adapter and US/JP/EU/UK/TW/AU/CN power cord (optional)
Fan Module	Fan solution
Buttons	Power and Recovery
RTC Battery	Support RTC battery and Battery Life Monitoring by MCU
Dimension/Weight	93mm x 81.2mm x 81.9mm (3.66” x 3.19” x 3.22”) Weight: 500g
Certifications	CE, FCC,VCCI,KC(TBA)

1.2 Option Accessory

Item	D133S series
NVIDIA® Jetson	NVIDIA® Jetson Orin™ NX / Orin™ Nano for D133S
Power adapter/ Power Cord	12V/5A adapter and US/JP/EU/UK/TW/AU/CN power cord (optional)
MIPI Camera (internal I/O)	● For 22 pin MIPI connector *1.* raspberry pi camera v2/v3 *2.* Manufacturer: APPRO.PHO ■ B-04: IMX179(8M)MIPI, 1080P(30fps)

2.0 Product Overview

2.1 Block Diagram

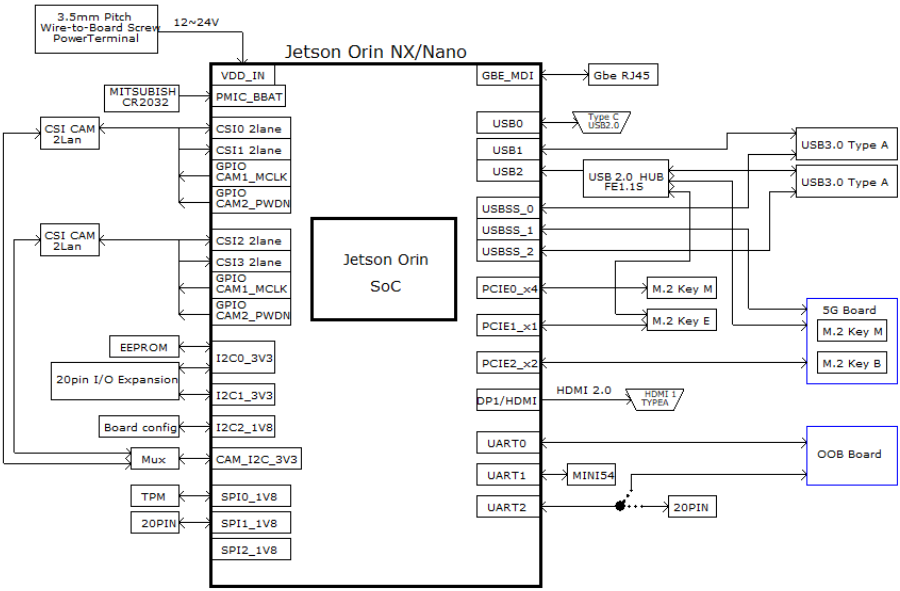

2.2 Front View and Back View of Carrier board

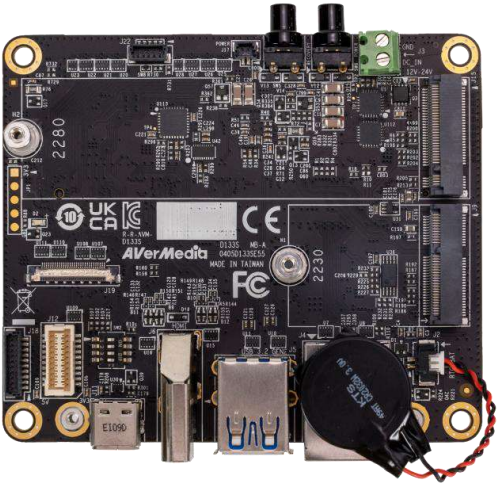

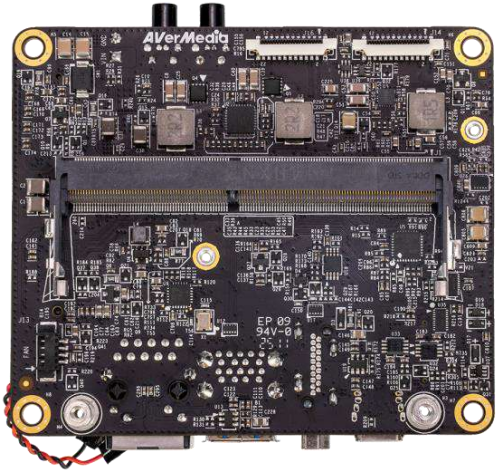

2.3 Front View and Three -Quarter View of BoxPC

5V
2
EXPANSION HEADER
20
ANTENNA 4
1
3.3V
19

ANTENNA 3

2.3 Connector Summary

Front View Interface

J2	External RTC Battery wafer
J3	DC power jack
J4	Gigabit Ethernet Connector w/LEDs
J5	USB 3.0 Gen1 Dual Port Type A Connector
J6	HDMI Type-A Vertical Side Connector with lock (Female)
J9	M.2 E-Key Socket
J11	USB type C
J12	20-pin Expansion
J15	M.2 M-Key Socket
J18	OOB Connector
J19	Expansion Daughter Board Connector
J22	Expansion Daughter Board Power Connector
SW2	DIP switch
SW5	Recovery Button w/LEDs
SW6	Power Button w/LEDs
SW7	UART2 option switch

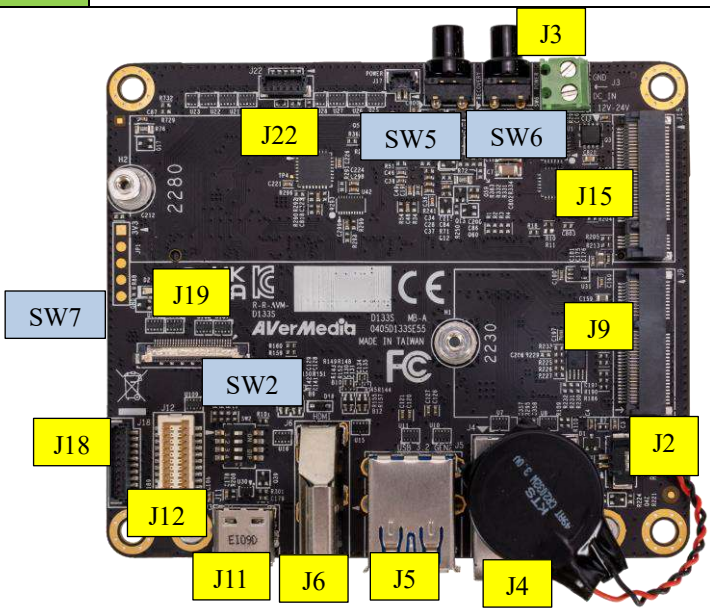

Back View Interface

J1	SO-DIMM 260-pin 90° SMD Socket(H-9.2mm) for Jetson Orin™ NX/ Orin™ Nano SOM
J13	Fan Wafer
J14	FPC connector for 4-lane MIPI CSI-2
J16	FPC connector for 4-lane MIPI CSI-2

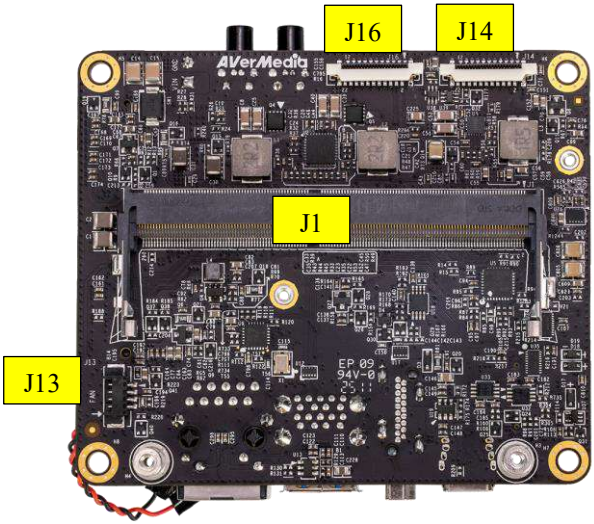

3.0 Feature Description

3.1 Jetson module Connector

Function	Provide connection with NVIDIA® Jetson Orin™ NX /Orin Nano module	
Location	J1	
Type Description	SOCKET_DDR4 SO-DIMM_260PIN_90°	
Manufacturer and Part Number	Foxconn ASAA826-EASB0-7H	
Mating Connector	NVIDIA® Jetson Orin™ NX/Orin Nano	
Pinout	Please refer to NVIDIA Jetson System-on-Module datasheet for pinout details.	
Remarks	https://developer.nvidia.com/embedded/downloads	

3.2 RTC Battery Connector

Function	RTC battery for module	
Location	J2	
Type Description	WAFER_1*2PIN_1.25 ㎜_90°_SMD	
Manufacturer and Part Number	宏致_50271-00201-001	
Mating Connector	Molex 51021-8602	
Pinout	Pin # / Description PIN1 / GND PIN2 / 3V Power	
Remarks	RTC Battery: KTS BCR2032TH5.5VM1MB	

3.3 Power Supply Connector

Function	Power Supply	
Location	J3	
Type Description	Socket_Terminal Block_1*2PIN_90°	
Manufacturer and Part Number	DECA MB332-350M02	
Mating Connector	DC 5.5 x 2.5 mm Power cable	
Pinout	PIN# / Description / Color #1 / 12-24V / White #2 / GND / Black	
Remarks	None	

3.4 Gigabit Ethernet Connector

Function	1Gb single-port Ethernet connector, used to connect to the host system.	
Location	J4	
Type Description	RJ45 8P8C single-port with LED	
Manufacturer and Part Number	鴻海_JFM38013-0L03-4F	
Mating Connector	Any RJ45 plug with Cat5, Cat5e, Cat6 type cabling.	
Pinout	Comply with Ethernet standards.	
Remarks	NA	

3.5 USB 3.2 Gen2 Type-A Connector #1 and #2

Function	USB 3.2 Gne2 Type-A connector #1 & #2	
Location	J5	
Type Description	Dual-port USB 3.2 Type-A female connector	

Manufacturer and Part Number	冠泰, CU3B-AFR15U-096H	
Mating Connector	Any USB 3.2 standard Type-A interface cable or device.	
Pinout	Please refer to USB 3.2 standard.	
Remarks	None	

3.6 HDMI OUTPUT

Function	HDMI output connector	
Location	J6	
Type Description	HDMI Type-A female connector	
Manufacturer and Part Number	捷湧 EDL, HM-FVD480B	
Mating Connector	Any HDMI standard Type-A interface cable or device.	
Pinout	Please refer to HDMI standard.	
Remarks	None	

3.7 M.2 E key 2230

Function	M.2 E key	
Location	J9	
Type Description	SOCKET_M.2-KEY E_75PIN_90°_SMD	
Manufacturer and Part Number	宏致_ACES 51748-07502-005_P0.5 ㎜-H8.5 ㎜	
Mating	Any M.2 E key 2230 card standard interface	

Connector	device.	
Pinout	None	

3.8 USB type C Connector

Function	BSP Installation as recovery mode	
Location	J11	
Type Description	JACK_USB_C TYPE(F)_90°_PIP-L1.45 ㎜	
Manufacturer and Part Number	宏致 ACES, 57988-0240D-001	
Mating Connector	Any USB type C standard interface cable	
PIN OUT	Please refer to USB type C standard.	

3.9 M.2 M key 2280

Function	M.2 M key	
Location	J15	
Type Description	SOCKET_M.2-KEY M_75PIN_90°_SMD	
Manufacturer and Part Number	宏致_ACES 51757-0750C-012_P0.5 ㎜-H5.5 ㎜	
Mating Connector	Any M.2 M key 2280 card standard interface device.	
Pinout	Please refer to M.2 M key card standard for the pinout details.	
Remarks	None	

3.10 Optional Function Selection

Function	Fan PWM controller/Auto Power on	
Location	SW2	
Type Description	4 SPST DIP switch	
Manufacturer and Part Number	DIPTRONICS IN OFF-SWITCHING 0.025A/24VDC	

Pinout	
Remark	Default SW2 all OFF

Position No	Position Description	Switch ON	Switch OFF
1 (SW1)	NA	NA	NA
2 (SW2)	WDT function	WDT disable	WDT enable
3 (SW3)	Power-Up / Start-up Control	"ATX Mode" - Power Button Press Required	"AT Mode" - Automatic Start-up Enabled
4 (SW4)	PWM Fan Control	FAN Always ON	FAN PWM Enabled (SW Controlled)

3.11 Power Button

Function	Power button
Location	SW6
Type Description	Button
Manufacturer and Part Number	冠泰Champway, LS67AK-NBR-A-R2KA9
Pinout	N/A
Remark	None

3.12 Recovery Button

Function	Recovery button
Location	SW5
Type Description	Button
Manufacturer and Part Number	冠泰Champway, LS67AK-NBR-A-R2KA9
Pinout	N/A
Remark	None

3.13 20-Pin GPIO expansion

Function	General-purpose input/output
Location	J12
Type Description	2x I2C, 1x UART, 9x GPIOs
Manufacturer and Part Number	JST: BM20B-SHLDS-G-TFT
Mating Connector	ACES: 50420-020HKH0-001

Pinout

Address	Pin Name	20-Pin Index (Devkit index)		Pin Name	Address
	+3V3	1	2	+5V	
	GND	3	4	GND	
/dev/i2c-7	I2C1_SDA	5	6	UART2_TXD_3V3	/dev/ttyTCU0 (Debug Console)
	I2C1_SCL	7	8	UART2_RXD_3V3	
/dev/i2c-1	I2C0_SDA	9	10	GND	
	I2C0_SCL	11	12	SPI1_SCK	gpio(470)
gpio(398)	I2S0_SCLK	13	14	SPI1_MISO	gpio(471)
gpio(399)	I2S0_DOUT	15	16	SPI1_MOSI	gpio(472)
gpio(400)	I2S0_DIN	17	18	SPI1_CS0	gpio(473)
gpio(401)	I2S0_FS	19	20	SPI1_CS1	gpio(474)

3.14 MIPI CSI-2 DPHY Lanes

Function	MIPI camera module connector
Location	J14 , J16
Type Description	WAFER_22PIN_0.5 ㎜_180°
Manufacturer and Part Number	宏致_ACES, 50554-02241-003 0.5mm ZIF FPC CONN. SMT S/T TYPE
Mating Connector	4 Lane MIPI CSI-2 camera connector (22Pin)

Pinout

J14

Description	22-pin Index		Description
+3V3_MIPI	Pin1	Pin2	CAM0_I2C_SDA
CAM0_I2C_SCL	Pin3	Pin4	GND

CAM0_MCLK	Pin5	Pin6	CAM0_PWDN_LS
GND	Pin7	Pin8	CSI1_D1_P
CSI1_D1_N	Pin9	Pin10	GND
CSI1_D0_P	Pin11	Pin12	CSI1_D0_N
GND	Pin13	Pin14	CSI0_CLK_P
CSI0_CLK_N	Pin15	Pin16	GND
CSI0_D1_P	Pin17	Pin18	CSI0_D1_N
GND	Pin19	Pin20	CSI0_D0_P
CSI0_D0_N	Pin21	Pin22	GND

J16

Description	22-pin Index		Description
+3V3_MIPI	Pin1	Pin2	CAM1_I2C_SDA
CAM1_I2C_SCL	Pin3	Pin4	GND
CAM1_MCLK	Pin5	Pin6	CAM1_PWDN_LS
GND	Pin7	Pin8	CSI3_D1_P
CSI3_D1_N	Pin9	Pin10	GND
CSI3_D0_P	Pin11	Pin12	CSI3_D0_N
GND	Pin13	Pin14	CSI2_CLK_P
CSI2_CLK_N	Pin15	Pin16	GND
CSI2_D1_P	Pin17	Pin18	CSI2_D1_N
GND	Pin19	Pin20	CSI2_D0_P

	CSI2_D0_N	Pin21	Pin22	GND	

3.15 Fan Power connector

Function	Fan Power Connector	
Location	J13	
Type Description	WAFER_1*4PIN_1.25 ㎜_90°	
Manufacturer and Part Number	ACES 50271-0040N-001_BLACK	
Mating Connector	ACES 50276-004H0H0-001	
Pinout		
Remarks	None	

Pin #	Description
PIN 1	GND
PIN 2	+5V Power
PIN 3	FAN_TACH
PIN 4	FAN_PWM

3.16 Expansion 4/5G Daughter Board Connector

Function	Expansion 4/5G Daughter Board Connector	
Location	J19	
Type Description	WAFER_30PIN_0.4 ㎜_90°_SMD	
Manufacturer and Part Number	KEL: USL00-30L	
Mating Connector	KEL: USL20-30SS-020-B	
Pinout		

Pin #	Description
PIN 1	GND
PIN 2	PCIE2_RX0_N
PIN 3	PCIE2_RX0_P
PIN 4	GND
PIN 5	PCIE2_TX0_N

PIN 6	PCIE2_TX0_P	
PIN 7	GND	
PIN 8	PCIE2_CLK_N	
PIN 9	PCIE2_CLK_P	
PIN 10	GND	
PIN 11	PCIE2_RST	
PIN 12	PCIE2_CLKREQ	
PIN 13	PCIE2_WAKEN	
PIN 14	GND	
PIN 15	GND	
PIN 16	USB_HUB_DP3	
PIN 17	USB_HUB_DN3	
PIN 18	GND	
PIN 19	USBSS1_RX_N	
PIN 20	USBSS1_RX_P	
PIN 21	GND	
PIN 22	USBSS1_TX_N	
PIN 23	USBSS1_TX_P	
PIN 24	GND	
PIN 25	LTE_PWR	
PIN 26	5G_RST	
PIN 27	AIRPLANE_CTRL	
PIN 28	GNSS_CTRL	
PIN 29	+1V8_SYSTEM	
PIN 30	GND	
Remarks	None	

3.17 UART2 Optional Selection

Function	UART2 Optional Selection	
Location	SW7	
Type Description	2 SPST DIP switch	

Manufacturer and Part Number	冠泰: NDSVM-02Q-T-R	
Pinout	Table DIP Switches(SW7) Position No. / Position Description / Switch ON / Switch OFF 1 / UART2_ / UART2 for OOB / UART2 for 20pin IO expansion 2 / x / x / x	
Remark	Default SW2 all OFF	

3.18 Expansion Daughter Board Power Connector

Function	Expansion Daughter Board Power Connector	
Location	J22	
Type Description	WAFER_1*5PIN_1 ㎜ _180°_SMD	
Manufacturer and Part Number	ACES_50228-00571-001	
Mating Connector	ACES:50233-005H0H0-001	
Pinout	Pin # / Description PIN1 / DC-IN PIN2 / DC-IN PIN3 / CARRIER_PWR_ON PIN4 / GND PIN5 / GND	
Remarks	RTC Battery: KTS BCR2032TH5.5VM1MB	

3.19 Other Switches and Jumpers

Other switches and jumpers listed on the boards but not mentioned in this manual are reserved for the internal use by AVerMedia. They are not open to the client application.

4.0 OOB Hardwarer Function Settings.

4.1 OOB connector

Function	OOB Connector
Location	J18
Type Description	WAFER_1*10PIN_1 ㎜_180°_SMD
Manufacturer and Part Number	ACES: 50228-01071-001
Mating Connector	WELL-LIN:1010-H10P-HF SG: WB1001H-1000
Pinout	

Pin #	Description
PIN 1	GND
PIN 2	NC
PIN 3	UART2_RXD
PIN 4	UART2_TXD
PIN 5	UART0_RXD
PIN 6	UART0_TXD
PIN 7	+5V_SYSTEM_GP
PIN 8	SYS_RST_AI
PIN 9	BUTTON_PWR_ON_MCU
PIN 10	+5V_STANDBY

Remarks	None

4.2 UART2 Optional Selection

Function	UART2 Optional Selection
Location	SW7
Type Description	2 SPST DIP switch
Manufacturer and Part Number	冠泰: NDSVM-02Q-T-R

<table>
<tr><td>Pinout</td><td>Table DIP Switches(SW7)
<table>
<tr><th>Position No.</th><th>Position Description</th><th>Switch ON</th><th>Switch OFF</th></tr>
<tr><td>1</td><td>UART2_</td><td>UART2 for OOB</td><td>UART2 for 20pin IO expansion</td></tr>
<tr><td>2</td><td>x</td><td>x</td><td>x</td></tr>
</table></td></tr>
<tr><td>Remark</td><td>Default SW2 all OFF</td></tr>
</table>

4.3 Gigabit Ethernet connection setting (RMII)

When OOB RMII functionality is supported, please note that both Ethernet 2 and the OOB port need to be connected.

5.0 Installation

1. Check and ensure all the external system power supplies are turned off.
2. Install the Micro USB2.0 cable to Jetson platform connector.
3. Press and hold on the Recover button.
4. Connect the power cord to the box PC.
5. BSP Installation

5.1 BSP Setup Instructions

BSP (board support package) file: D133ON-R2.0.*.tar.gz for D133ON
If you want to get the BSP download link, Please contact with AVerMedia FAE.

Default login username/password of the BSP is nvidia/nvidia

If you have difficulties to access the BSP download link, please visit AVerMedia website at https://www.avermedia.com/professional/download, or contact technical support at https://www.avermedia.com/professional/technical_support or e-mail us at eusupport@avermedia.com for further assistance.

BSP Installation steps for NVIDIA Jetson board: (Important Note: Please backup your personal files before re-flashing BSP)
After you download the BSP file and put the file in a Linux PC, please refer to the steps below to re-flash BSP.

1. Let the JETSON Orin NX initiate recovery mode.
You have to keep pressing “Recovery” button and then power on the NVIDIA Jetson board to initiate recovery mode.

When connecting a NVIDIA Jetson board to a Linux PC via a MicroUSB to USB cable, you can check kernel messages with `dmesg` command in the Linux PC.
Once you see these messages in the kernel messages, this means that the NVIDIA Jetson board is in the recovery mode.
[24685.229129] usb 1-7: Product: APX
[24685.229132] usb 1-7: Manufacturer: NVIDIA Corp

2. Using the commands below in the Linux PC to start re-flashing BSP.

$ sudo tar zxvf D133ON-R2.*.*.tar.gz

(file: D133ON-R2.*.*.tar.gz for D133ONB)

$ cd JetPack_*.**/Linux_for_Tegra

$ ./create_user.sh (recommend)

$ sudo ./setup.sh

$ sudo ./install.sh

The BSP is support flash to default nvme ssd or external USB dungle.

You can select whitch one you want to flash after launching the install script.

Note: sudo is required to re-flash the BSP..

6.0 Software

This section describes BSP's features for D133SONB

1. Support optional M.2 WI-FI/Bluetooth modules (Intel® Wireless-AC 9260), the manager UI of AC9260 WiFi/Bluetooth is located on the upper-right corner of Ubuntu desktop. It can be also controlled by nmcli/hcitool in command line.

2. Support SD slot (D133SON is not support SD card slot.)

3. Power Mode
   Power mode can be modified by the UI on the upper-right corner of Ubuntu or the following commands.

```
# get current power mode
$ sudo nvpmodel -q
# setup power mode
# where <x> is power mode number, please refer to
https://docs.nvidia.com/jetson/archives/r35.2.1/DeveloperGuide/index.html#page/Tegra%20Linux%20Driver%20Package%20Development%20Guide/clock_power_setup.html# for more information
$ sudo nvpmodel -m <x>
```

* Current default power mode:

D133ON: MODE 15W DESKTOP (2)

4. RTC Battery

The following command can get RTC battery voltage.

```
$ sudo avt_tool -a | grep -oP "AIN5.*\[\K[^\]]*"
```

5. Fan Speed

The following commands can get PWM fan information.

The following commands can get PWM fan information.

* Where <x> and <y> are dynamic hwmon indexes

```
# Stop FAN CONTROL SERVICE firstly
sudo systemctl stop nvfancontrol.service

# get current power setting of PWM Fan (0 ~ 255)
$ sudo su
$ cat /sys/devices/platform/pwm-fan/hwmon/hwmon<x>/pwm1

# set power setting of PWM Fan (0~255)
$ sudo su
$ echo <PWM_duty_cycle> >    /sys/devices/platform/pwm-
fan/hwmon/hwmon<x>/pwm1

# get fan RPM value (revolutions per minute)
$ sudo su
$ cat /sys/devices/platform/gpio_tachometer/hwmon/hwmon<y>/gpiotach_rpm
```

6. MIPI CSI Camera

There are 2x 2-lane and 1x 4-lane MIPI CSI camera supported on D133ONB, for current supported products type are listing as below:

* IMX219 (2-lane)
* IMX477 (2-lane): IMX477 requires a hardware modification in order to work with Jetson Platforms. Please refer to https://developer.ridgerun.com/wiki/index.php/Raspberry_Pi_HQ_camera_IMX477_Linux_driver_for_Jetson#Compatibility_with_NVIDIA.C2.AEJetson.E2.84.A2_Platforms
* IMX179 (2-lane)
* IMX290 (2-lane)
* IMX290ISP (2-lane)

Test Command:

> Raspberry pi v2 :

* Please follow the settings below first:

1. Set the power mode to maximize at 25W.
2. Follow the settings in the Release Notes, and maximize the ISP & VI clock.

No	width	height	framerate
0	3264	2464	21
1	3264	1848	28
2	1920	1080	30
3	1640	1232	30
4	1280	720	60

```
$ gst-launch-1.0 nvarguscamerasrc sensor-id=0 ! 'video/x-raw(memory:NVMM), width=(int)3280, height=(int)2464, format=(string)NV12, framerate=(fraction)21/1' ! queue ! nvvidconv ! xvimagesink -e
$ gst-launch-1.0 nvarguscamerasrc sensor-id=0 ! 'video/x-raw(memory:NVMM), width=(int)3280, height=(int)1848, format=(string)NV12, framerate=(fraction)28/1' ! queue ! nvvidconv ! xvimagesink -e
$ gst-launch-1.0 nvarguscamerasrc sensor-id=0 ! 'video/x-raw(memory:NVMM), width=(int)1920, height=(int)1080, format=(string)NV12, framerate=(fraction)30/1' ! queue ! nvvidconv ! xvimagesink -e
$ gst-launch-1.0 nvarguscamerasrc sensor-id=0 ! 'video/x-raw(memory:NVMM), width=(int)1640, height=(int)1232, format=(string)NV12, framerate=(fraction)30/1' ! queue ! nvvidconv ! xvimagesink -e
$ gst-launch-1.0 nvarguscamerasrc sensor-id=0 ! 'video/x-raw(memory:NVMM), width=(int)1280, height=(int)720, format=(string)NV12, framerate=(fraction)60/1' ! queue ! nvvidconv ! xvimagesink -e
```

Multiple:

```
$ gst-launch-1.0 nvarguscamerasrc sensor-id=0 ! 'video/x-raw(memory:NVMM), width=(int)3264, height=(int)2464, format=(string)NV12, framerate=(fraction)21/1' ! queue ! nvvidconv ! xvimagesink -e & gst-launch-1.0 nvarguscamerasrc sensor-id=1 sensor-mode=0 ! 'video/x-raw(memory:NVMM), width=(int)3264, height=(int)2464, format=(string)NV12, framerate=(fraction)21/1' ! nvvidconv ! xvimagesink -e &
```

> Raspberry pi v3 (imx477):

No	width	height	framerate
0	3840	2160	30
1	1920	1080	60

$ gst-launch-1.0 -e nvarguscamerasrc sensor-id=0 ! 'video/x-raw(memory:NVMM),width=3840,height=2160,framerate=30/1' ! queue ! nvvidconv ! fpsdisplaysink video-sink='xvimagesink' sync=false

$ gst-launch-1.0 -e nvarguscamerasrc sensor-id=0 ! 'video/x-raw(memory:NVMM),width=1920,height=1080,framerate=60/1' ! queue ! nvvidconv ! fpsdisplaysink video-sink='xvimagesink' sync=false

Multiple:

$ gst-launch-1.0 nvarguscamerasrc sensor-id=0 ! "video/x-raw(memory:NVMM),width=1920,height=1080,framerate=60/1" ! nvvidconv ! xvimagesink -e & gst-launch-1.0 nvarguscamerasrc sensor-id=1 ! "video/x-raw(memory:NVMM),width=1920,height=1080,framerate=60/1" ! nvvidconv ! xvimagesink -e &

> IMX179 :

No	width	height	framerate
0	3280	2464	15
1	1920	1080	30
2	3280	1698	30
3	2096	1084	30
4	1640	1232	30
5	820	616	30
6	820	616	60

$ gst-launch-1.0 nvarguscamerasrc sensor-id=0 ! 'video/x-raw(memory:NVMM), width=(int)3280, height=(int)2464, format=(string)NV12, framerate=(fraction)15/1' ! queue ! nvvidconv ! xvimagesink -e

$ gst-launch-1.0 nvarguscamerasrc sensor-id=0 ! 'video/x-raw(memory:NVMM), width=(int)1920, height=(int)1080, format=(string)NV12, framerate=(fraction)30/1' ! queue ! nvvidconv ! xvimagesink -e

$ gst-launch-1.0 nvarguscamerasrc sensor-id=0 ! 'video/x-raw(memory:NVMM), width=(int)3280, height=(int)1698, format=(string)NV12, framerate=(fraction)30/1' ! queue ! nvvidconv ! xvimagesink -e

$ gst-launch-1.0 nvarguscamerasrc sensor-id=0 ! 'video/x-raw(memory:NVMM), width=(int)2096, height=(int)1084, format=(string)NV12, framerate=(fraction)30/1' ! queue ! nvvidconv ! xvimagesink -e

$ gst-launch-1.0 nvarguscamerasrc sensor-id=0 ! 'video/x-raw(memory:NVMM), width=(int)1640, height=(int)1232, format=(string)NV12, framerate=(fraction)30/1' ! queue ! nvvidconv ! xvimagesink -e

$ gst-launch-1.0 nvarguscamerasrc sensor-id=0 ! 'video/x-raw(memory:NVMM), width=(int)820, height=(int)616, format=(string)NV12, framerate=(fraction)30/1' ! queue ! nvvidconv ! xvimagesink -e

$ gst-launch-1.0 nvarguscamerasrc sensor-id=0 ! 'video/x-raw(memory:NVMM), width=(int)820, height=(int)616, format=(string)NV12, framerate=(fraction)60/1' ! queue ! nvvidconv ! xvimagesink -e

> IMX290 :

No	width	height	framerate
0	1948	1096	30
1	1948	1096	60

$ gst-launch-1.0 nvarguscamerasrc sensor-id=0 ! 'video/x-raw(memory:NVMM), width=(int)1948, height=(int)1096, format=(string)NV12, framerate=(fraction)30/1' ! queue ! nvvidconv ! xvimagesink -e

$ gst-launch-1.0 nvarguscamerasrc sensor-id=0 ! 'video/x-raw(memory:NVMM), width=(int)1948, height=(int)1096, format=(string)NV12, framerate=(fraction)60/1' ! queue ! nvvidconv ! xvimagesink -e

> IMX290ISP :

No	width	height	framerate
0	1920	1080	25/30/50/60
1	1280	960	25/30/50/60
2	1280	720	25/30/50/60
0	800	600	25/30/50/60
1	640	480	25/30/50/60
2	640	360	25/30/50/60

$ gst-launch-1.0 v4l2src io-mode=4 device=/dev/video0 do-timestamp=true ! 'video/x-raw, width=1920, height=1080, framerate=60/1, format=UYVY' ! queue ! xvimagesink sync=false

$ gst-launch-1.0 v4l2src io-mode=4 device=/dev/video0 do-timestamp=true ! 'video/x-raw, width=1280, height=960, framerate=30/1, format=UYVY' ! queue ! xvimagesink sync=false

```
$ gst-launch-1.0 v4l2src io-mode=4 device=/dev/video0 do-timestamp=true !
'video/x-raw, width=1280, height=720, framerate=30/1, format=UYVY' ! queue !
xvimagesink sync=false

$ gst-launch-1.0 v4l2src io-mode=4 device=/dev/video0 do-timestamp=true !
'video/x-raw, width=800, height=600, framerate=30/1, format=UYVY' ! queue !
xvimagesink sync=false

$ gst-launch-1.0 v4l2src io-mode=4 device=/dev/video0 do-timestamp=true !
'video/x-raw, width=640, height=480, framerate=30/1, format=UYVY' ! queue !
xvimagesink sync=false

$ gst-launch-1.0 v4l2src io-mode=4 device=/dev/video0 do-timestamp=true !
'video/x-raw, width=640, height=360, framerate=30/1, format=UYVY' ! queue !
xvimagesink sync=false
```

7. GPIO usage

- For JetPack6.x

(1) introduction

a. Verify Pin Configuration: Before using a specific GPIO pin, ensure that the pin is configured as either an
'output' or 'bidirectional' in the pinmux spreadsheet.

This configuration is crucial as it defines the electrical behavior of the pin.

b. Locate the GPIO Pin: Use the gpiofind command to determine the pin's location in the system. For example,

to locate the SODIMM Pin 99, which corresponds to PX.04, execute:

(2) find gpio number

```
$ sudo gpiofind PX.04
```

This command will return the GPIO chip and offset. For example, it might return gpiochip0 118, indicating

that PX.04 is at offset 118 on gpiochip0.

(3) Set gpio value

a. Set High Voltage: To set the pin to a high voltage (logic level 1), use the following command:
$ sudo gpioset --mode=wait 0 118=1

b. Set Low Voltage: To set the pin to a low voltage (logic level 0), use this command:

$ sudo gpioset --mode=wait 0 118=0

These commands use the gpioset utility provided by libgpiod to control the output state of the GPIO pin, allowing you to interface with external devices or circuits connected to the Jetson.Using libgpiod is more efficient and modern compared to the deprecated sysfs interface, making it the recommended approach for GPIO control on newer Linux kernels

For L4T (Linux for Tegra) BSP support and the other software support associated with NVIDIA® Jetson Orin NX, please visit AVerMedia website to contact our technical support function. (https://www.avermedia.com/tw/support/contact)

8. **For D133 board VerC 5g(RM520N)/4g(EM05-G) module command**

```
> ethernet
    (1)Firt connect ethernet to run following command
       $ sudo nmcli connection modify "Mobile Broadband Connection"
connection.autoconnect no
    (2)if you want to disable auto connect run following command
       $ sudo nmcli connection modify "Mobile Broadband Connection"
connection.autoconnect no
       $ sudo systemctl restart NetworkManager
    (3)if you want to enable auto connect run following command
       $ sudo nmcli connection modify "Mobile Broadband Connection"
connection.autoconnect yes

    > gps
    (1) enable gps function
       step1: $ sudo avt_tool -G 0 220 1
       step2: $ echo -en "AT+QGPS=1\r\n" > ttyUSB_MobileModem_AT_port
    (2) show gps location
       $ cat ttyUSB1
```

(3) disable gps function

```
$ echo -en "AT+QGPSEND\r\n" > ttyUSB_MobileModem_AT_port
```

9. **Force Recovery Mode**

USB 3.l/ Jetson platform port of D133ONB can be used to re-program NVIDIA® Jetson Orin NX by using the other host system running NVIDIA Jetpack, as the procedure described below.

1. Power off the system. Ensure the system power must be completely OFF, instead of staying in the suspend mode or the sleep mode.
2. Connect a USB cable from Jetson platform USB port to the other host system which will be used to re-program the new system file into NVIDIA® Jetson Orin NX.
3. Press and hold down Force Recovery Button and then power on the carrier board.
4. After three seconds, release Force Recovery Button.
5. NVIDIA® Orin NX will show up on the USB list of the host system as a new NVIDIA target device.

After the system software is updated successfully, please ensure to power off the system. A clean power-on will then revert Jetson platform port back to the host mode

10. Power Consumption

Item Description	Power Consumption
Theoretical Maximum System Power Consumption	● D133SONB Power Consumption: 14.4W to 25.4W ● D133SOXB Power Consumption: 17.6W to 31.5W The condition is connected to USB3.0*2,USB*1,MIPI *2, LAN *1, SSD 256G*1,Wifi 9260*1, HDMI*1, with CPU/ GPU full loading. (maximum power consumption up to 60W based on adapter)
Typical System Power Consumption	The power consumption under the normal operating mode is depending on the application software running with NVIDIA® Orin™ NX/Nano

7.0 OOB Software Settings

Please refer to Getting Started with Allxon Remote Management Service

For more Allxon support, see https://www.allxon.com or contact them at service@allxon.com.

8.0 Dimension Drawings

8.1 Dimension Drawings of D133S carrier board

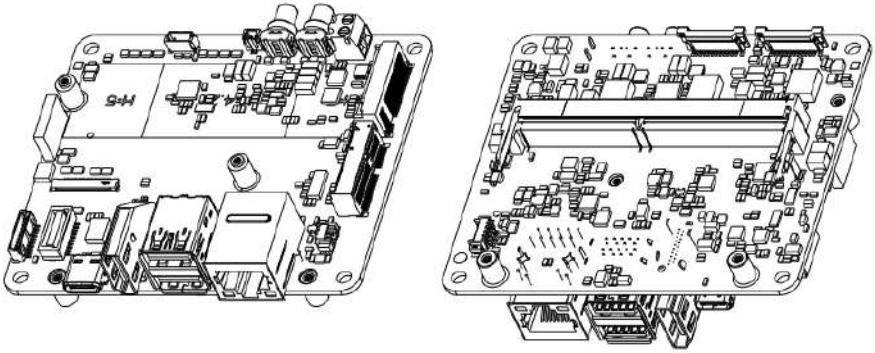

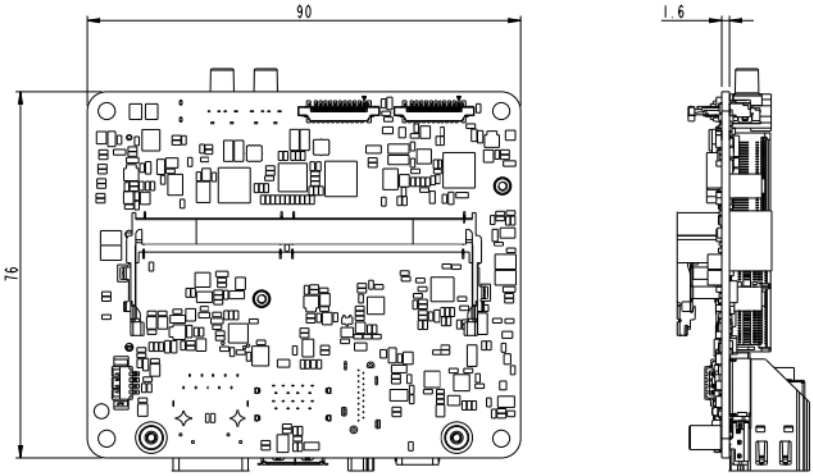

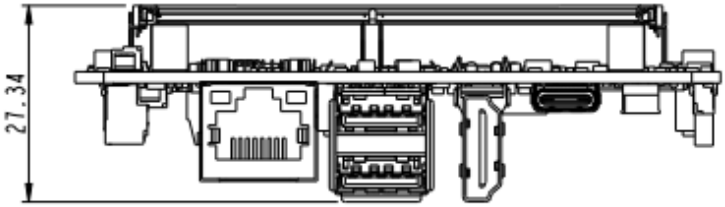
27.34

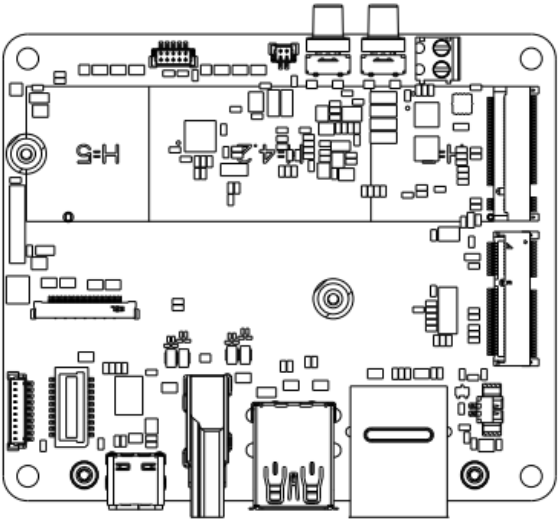
H=5
H=4.2

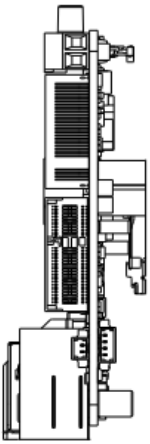

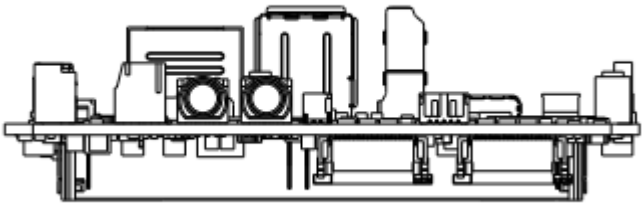

8.2 Dimension Drawing of D133SOXB/ONB Box PC

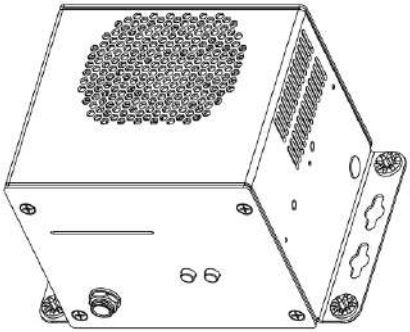

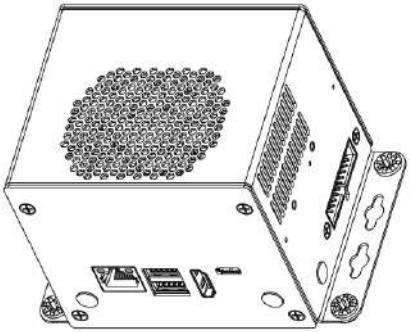

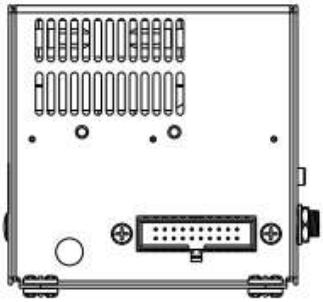

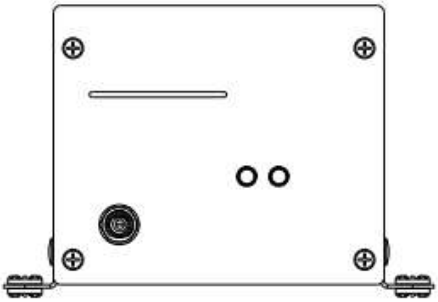

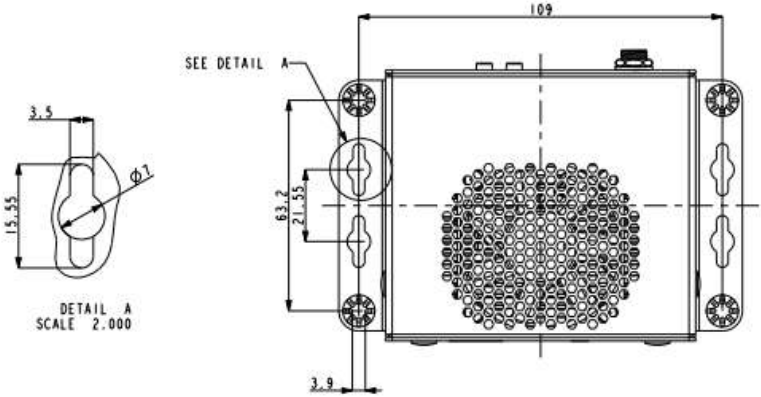
109
SEE DETAIL A
3.5
15.55
ϕ7
63.2
21.55
DETAIL A
SCALE 2.000
3.9

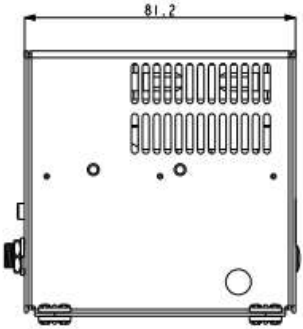
81.2

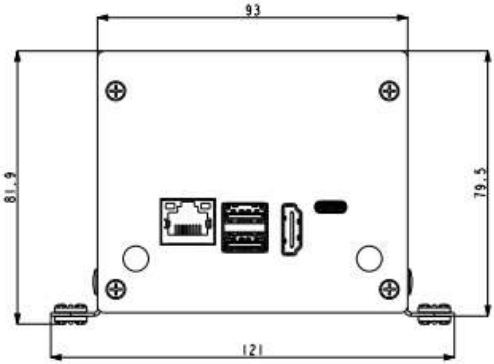
93
81.9
79.5
121

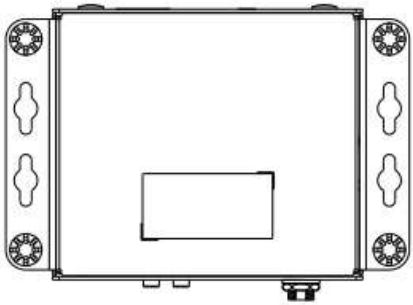

8.3 Dimension Drawing of D133SOXB/ONB +OOB Box PC

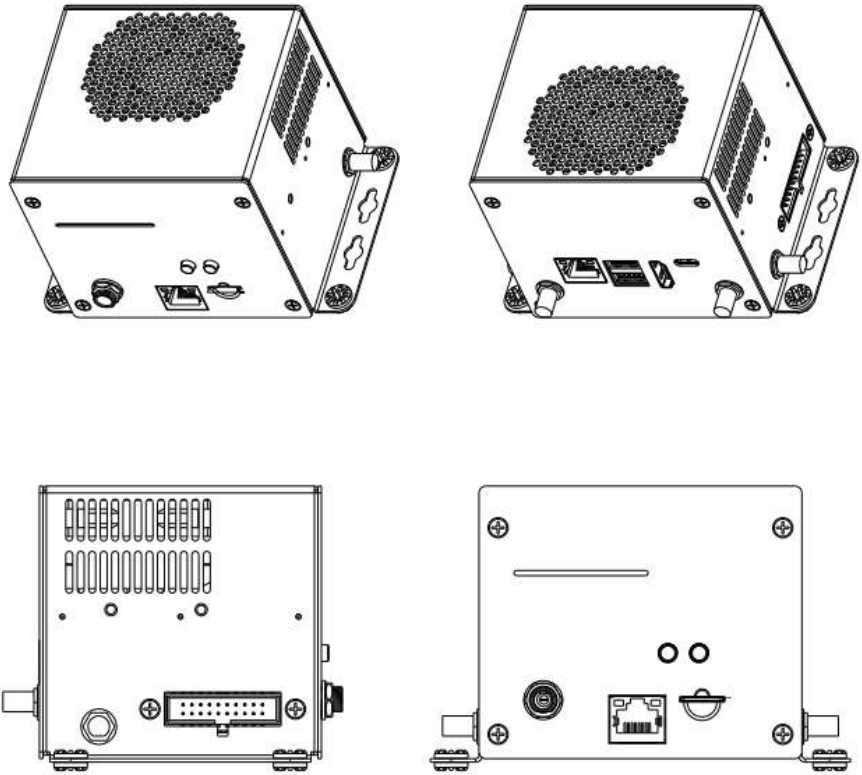

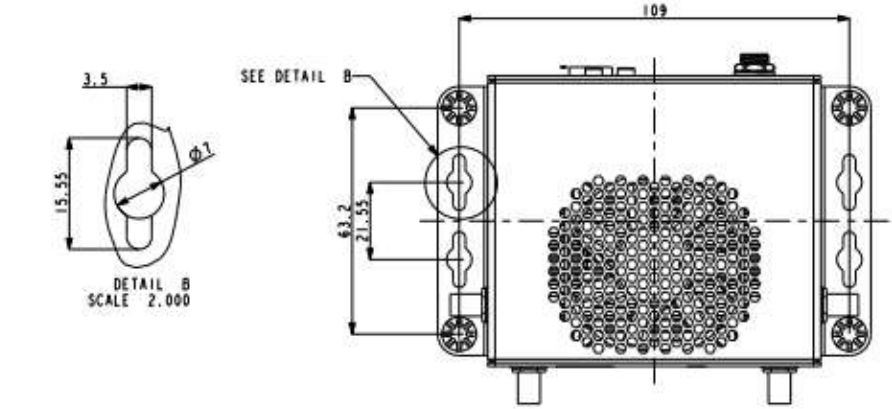
3.5
15.55
φ7
DETAIL B
SCALE 2.000
SEE DETAIL B
109
63.2
21.55

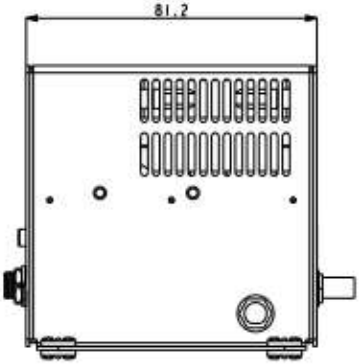
81.2

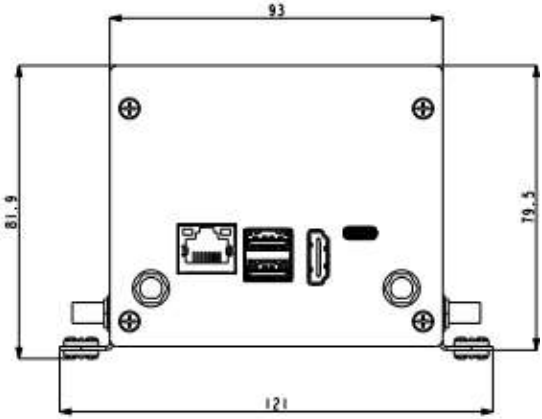
93
81.9
79.5
121

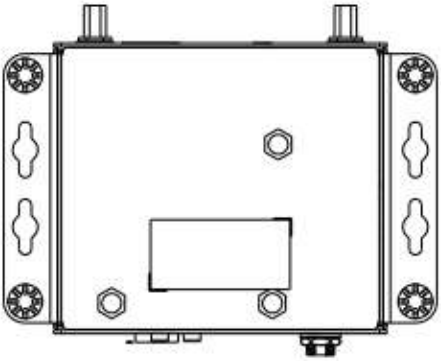

9.0 Accessory Drawings

9.1 Fan Module/ Adapter/ Power Cord

Fan Module for Orin Nano (TBA)

- Rated Voltage: 5V
- Operating Voltage Range: 3.5V~5.5V
- Rated Speed: 7000RPM±10%
  (Testing Speed After Continuous 3 Minute Operation At Ambient Temperature Of 25℃)
- Life Expectancy: 70,000hours at 40°C (WITH 15~65% RH)
- Bearing Type: Two Ball

Power Adapter 041312GOYANW (for Super Mode)

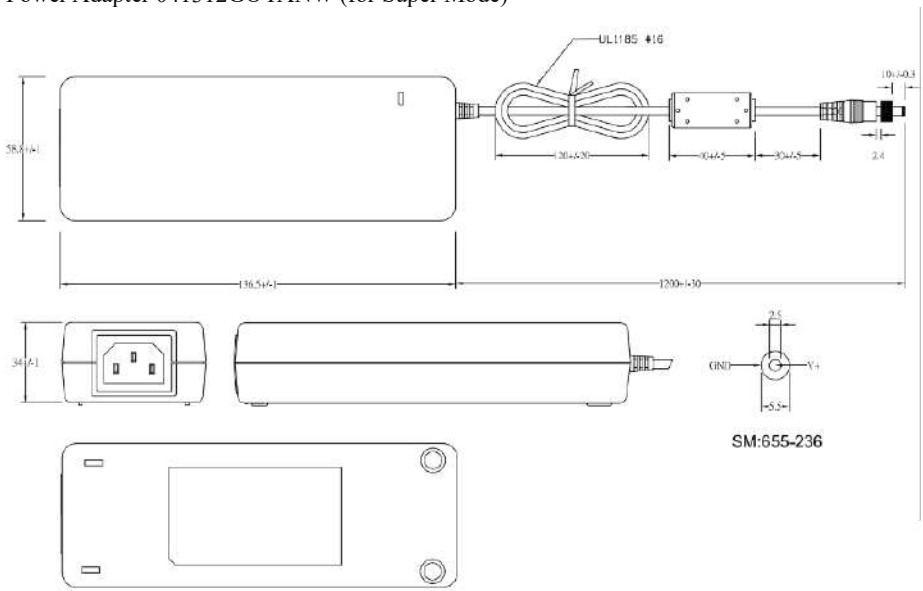

064APOWERBRX-IPD (TW version)

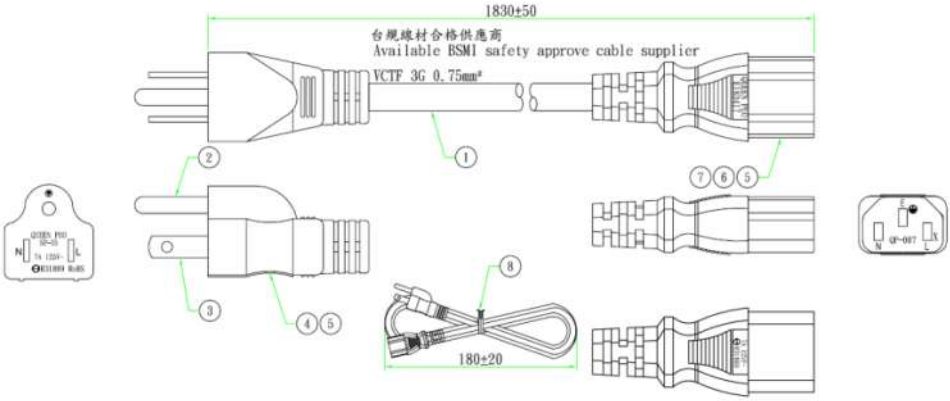

064APOWERBR2-IPD (US version)

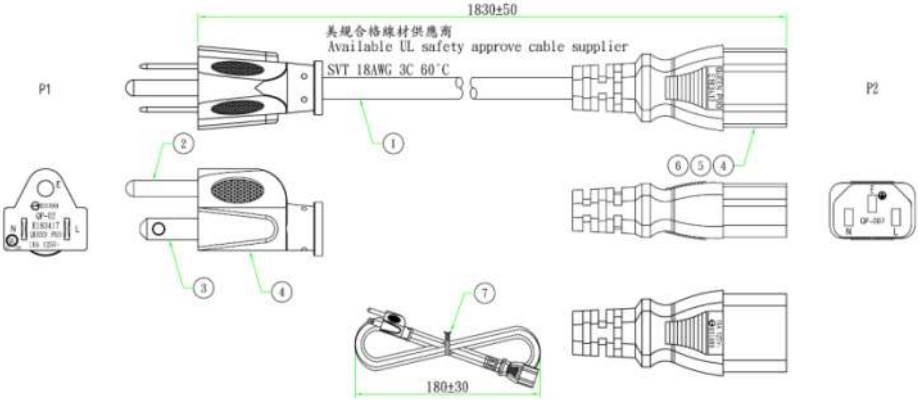

064APOWERBRW-IPD (UK version)

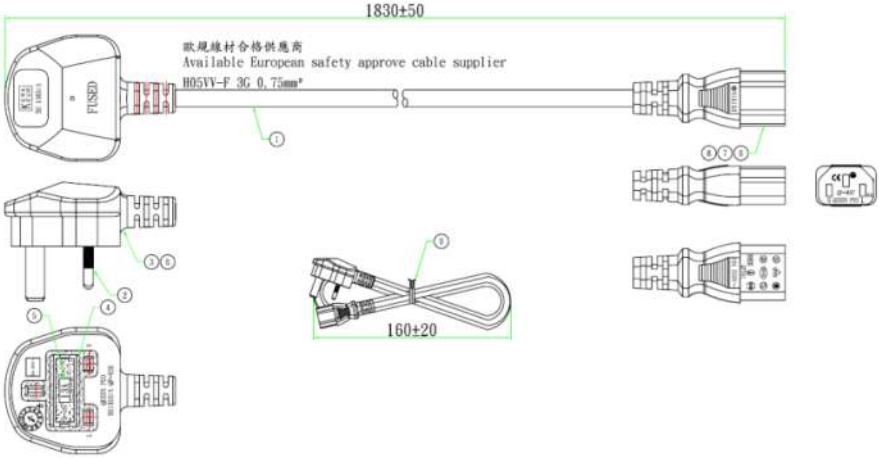

064APOWERBR5-IPD (EU version)

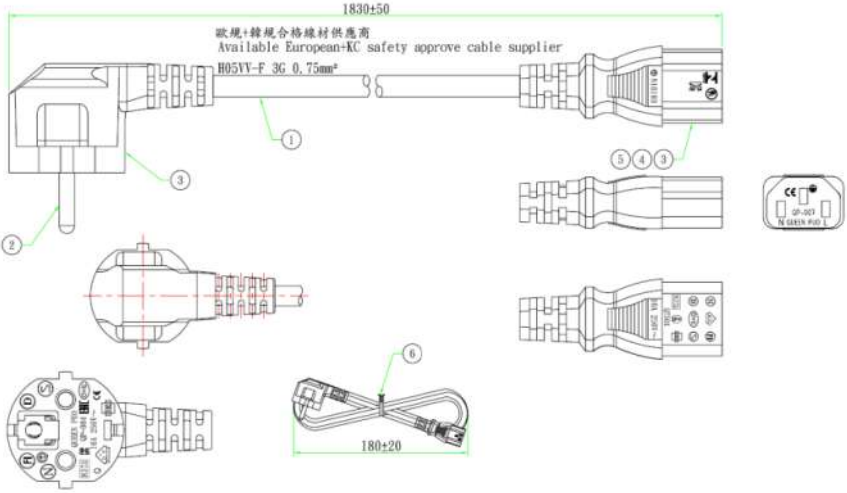

064APOWERBSL (JP version)

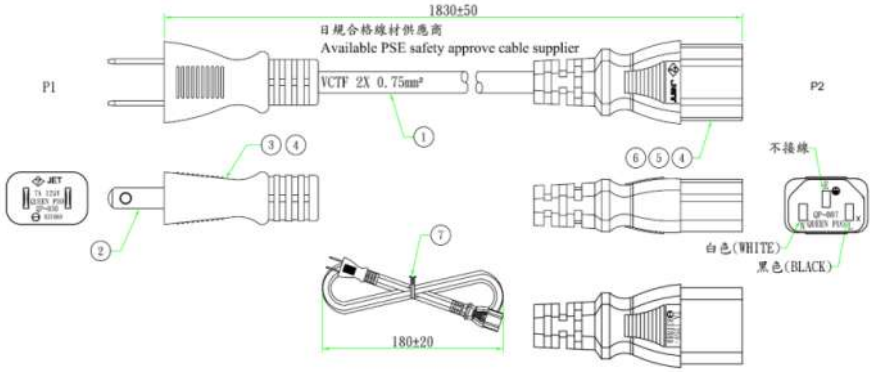
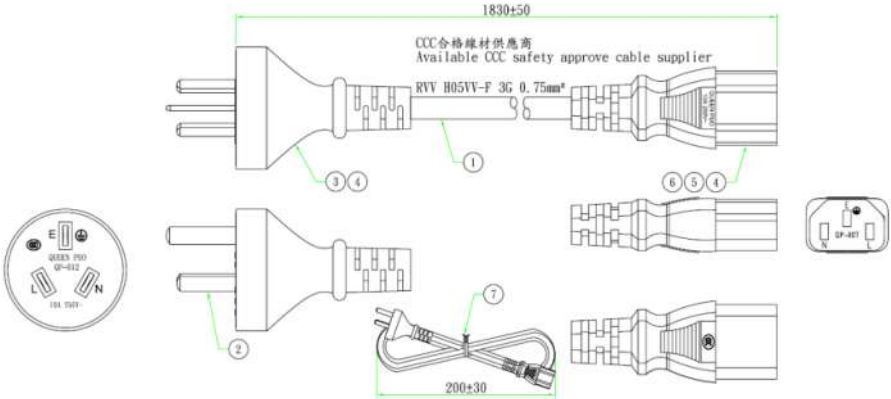
064APOWERBR4-IPD (CN version)